PK 16001·K
High Performance

PALFINGER CRANE

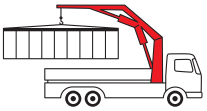

KTL protected | Paltronic 50 controlled | RRC*) Radio Remote Control operated | ISC*) Integrated Stability Control monitored

Compactness and efficiency

Its short, weight-optimized boom system gives the PK 16001 K an ideal power-weight ratio. The hexagonal tubes, manufactured in a precise and fully automated production line, provide for utmost precision even on tough jobs. Functional design and advanced electronics guarantee maximum comfort and safety.

Both light-weight and powerful

KP-HPK16001KL1+E
E 08/09, K 08/09, D 08/09

PK 16001 K *High Performance*

A

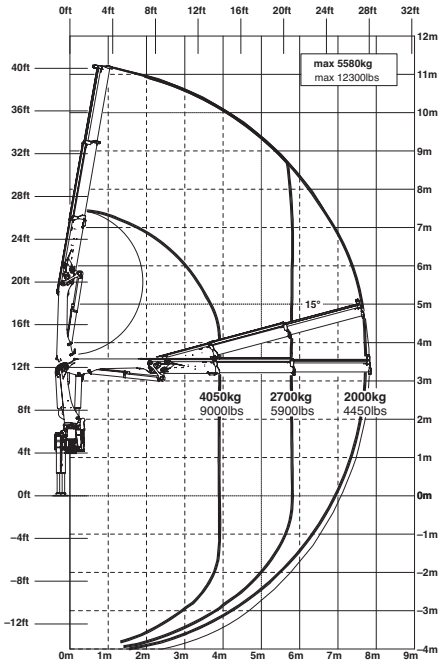

B

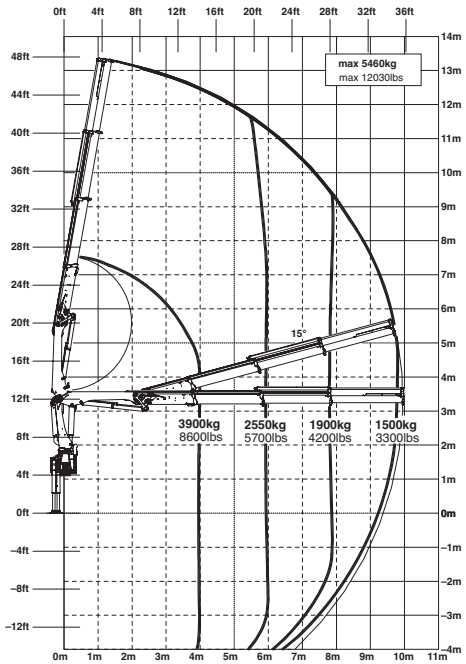

Technical Specifications (EN 12999 H1-B3)

Max. lifting moment	16.2 mt/158.9 kNm	117160 ft.lbs
Max. lifting capacity	5460 kg/53.6 kN	12040 lbs
Max. hydraulic outreach	10.0 m	32’ 10”
Max. manual outreach	14.2 m	46’ 7”
Slewing angle	420°	
Slewing torque	2.0 mt/19.6 kNm	14470 ft.lbs

Stabilizer spread	std. 5.0 m/16’ 5”	max. 6.6 m/21’ 8”
Fitting space required (std.)	0.80 m	2’ 7”
Width folded	2.50 m	8’ 2”
Max. operating pressure	320 bar	4640 psi
Recommended pump capacity	from 40 l/min to 60 l/min	10.6 US gal./min 15.9 US gal./min
Dead weight (std.)	1620 kg	3570 lbs

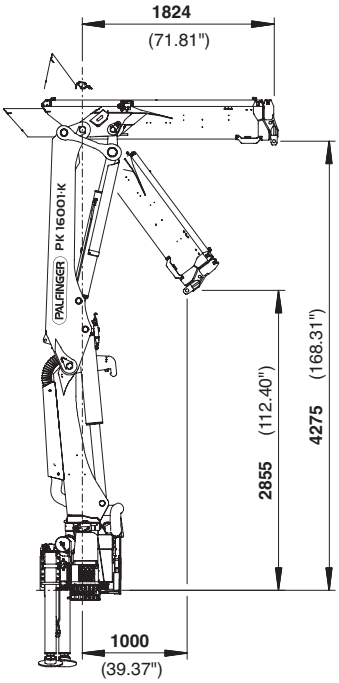

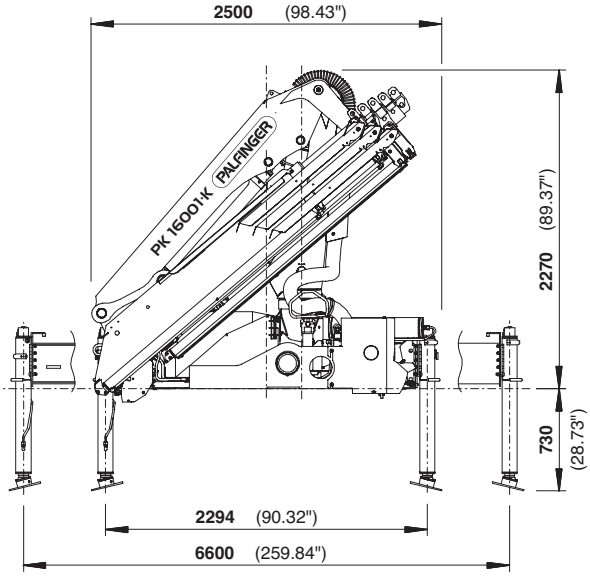

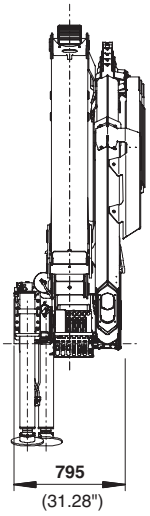

PALFINGER
www.palfinger.com

Applications shown in the leaflet do not always correspond to the standard specifications. Design and specification are subject to change without prior notice. Dimensions may vary. Subject to technical changes, errors and translation mistakes.

*) Optional features